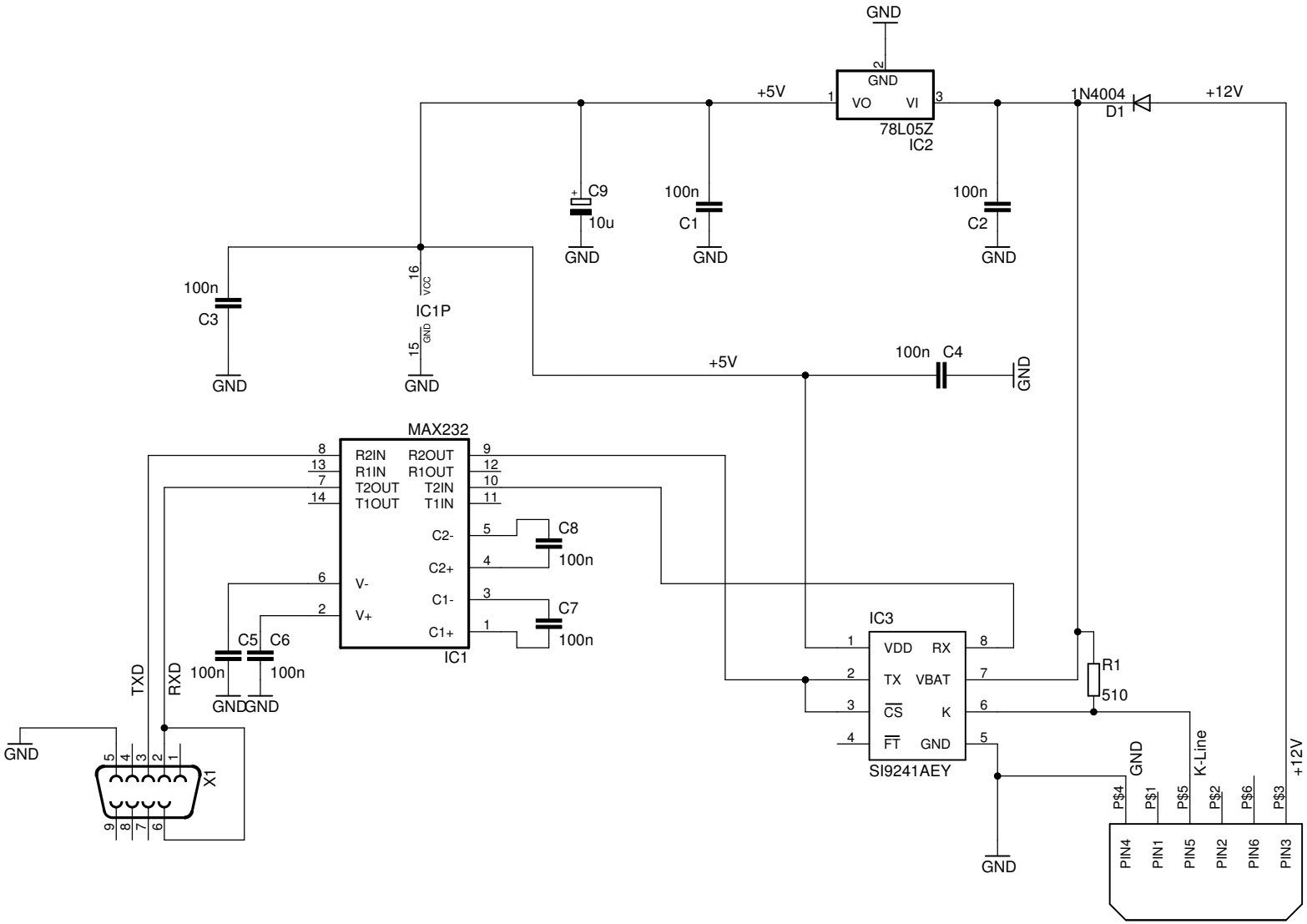

VISA UNISCAN (K-Line only)

TITLE: visa

Document Number:

REV:

Date: 5/8/09 1:09 AM

Sheet: 1/1